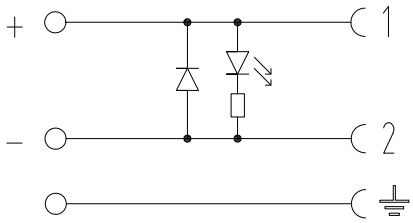

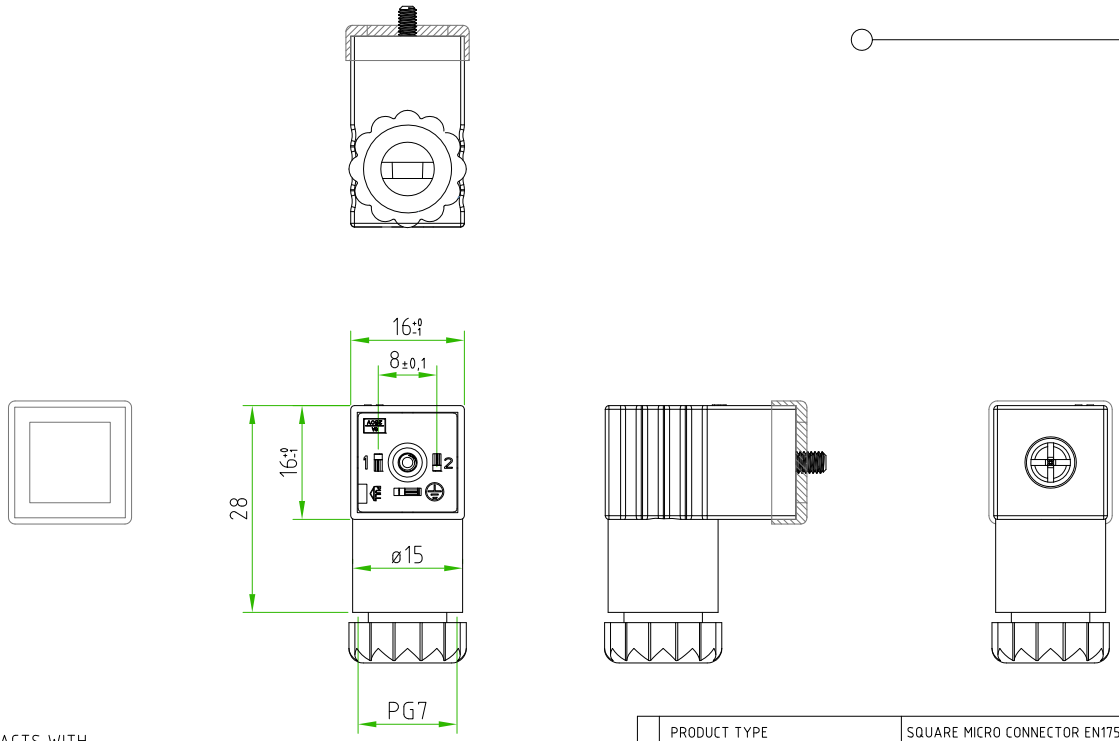

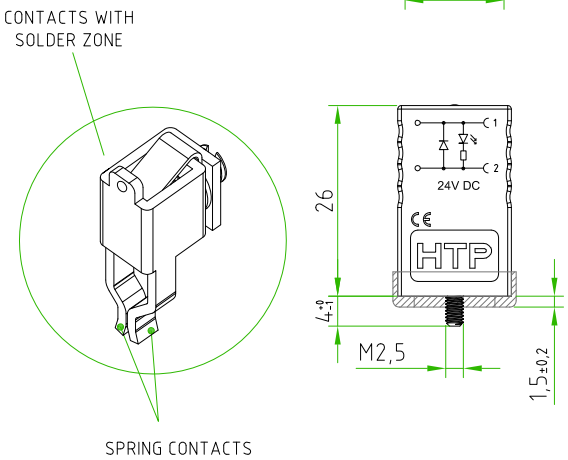

CONNECTOR FEATURES	PRODUCT TYPE	SQUARE MICRO CONNECTOR EN175301-803 FORM C FIELD ATTACHABLE.
	HOUSING MATERIAL/COLOUR	PA66 /TRASPARENT
	PRESS-CABLE MATERIAL/COLOUR	PA66 /BLACK
	INTERNAL CORE MATERIAL/COLOUR	PA66 /BLACK
	HEIGHT HOUSING	26mm
	CONTACTS SPACING	8mm
	CONTACTS TYPE	SCREW CONTACTS(with protection plate)
	NUMBER OF POLES	2POLES+EARTH
	EARTH POSITIONING	H.6 (TURNABLE)
	CABLE EXIT	PG7
	SUITABLE CABLE	FROM ø3,5mm TO ø6mm
	MAX.CONDUCTOR SIZE	0,75mm²
	PROTECTION CLASS	IP67
	CIRCUIT TYPE	RED LED+DIODE(1A)
	RATED VOLTAGE	24V DC
	CONNECTOR TEMPERATURE RANGE	from -40°C to +90°C
	GASKET TYPE	PROFILED NBR
	FIXING SCREW	M2.5X0.5 L=28mm
	CONNECTOR WITH H.T.P. LOGO	

CUSTOMER APPROVAL	
SIGNATURE	DATE
PLEASE SIGN AND RETURN	

Rev.	Modify	Date	Firma	Approved

Rev.	Modify	Date	Firma	Approved

Rev.	Modify	Date	Signed	Approved

A4

Designer	SUGLIANI R.	Date	2017-09-11	Tollerance	±0,3	Units:	mm	Series	EN175301-803 (form C)	Drawing n. 1/1
Approved	CIMMINO L.	Date	2017-09-11	Scale	1:1	Size:	A4	Customer code:		

DESCRIPTION

SQUARE MICRO CONNECTOR EN175301-803 (form C),FIELD ATTACHABLE,2P.+PE, WITH RED LED+DIODE (1A), 24V DC, TRASPARENT HOUSING, PG7. CONNECTOR WITH H.T.P. LOGO.

H.T.P.PART NUMBER

P1TZ2DL1

H.T.P. High Tech Products S.R.L. Via Lesina,45 -24030- Brembate di Sopra (Bg) - ITALY Phone:+39.035692509 Fax:+39.035203291 E-mail: info@webhtp.eu Web: http://www.webhtp.eu/

ALL RIGHTS ARE RESERVED.